Answers for 5.3

For use with pages 313–317

5.3 Skill Practice

1. bisector

2. Perpendicular bisectors bisect line segments while angle bisectors bisect angles; both divide the segment or angle into two equal parts, and both have special points of intersection.

3. 20° **4.** 12 **5.** 9

6. Yes; $\angle BAD \cong \angle CAD$, $\overline{DB} \perp \overline{AB}$ and $\overline{DC} \perp \overline{AC}$ so by the Angle Bisector Theorem $DB = DC$.

7. No; you do not know that $\angle BAD \cong \angle CAD$.

8. No; you do not know that $\overline{DB} \perp \overline{AB}$ or $\overline{DC} \perp \overline{AC}$.

9. No; you don't know that $\overline{HG} \cong \overline{HF}$, $\overline{HF} \perp \overrightarrow{EF}$, or $\overline{HG} \perp \overrightarrow{EG}$.

10. Yes; Converse of Angle Bisector Theorem

11. No; you don't know that $\overline{HF} \perp \overrightarrow{EF}$ or $\overline{HG} \perp \overrightarrow{EG}$.

12. 5 **13.** 4 **14.** 8

15. No; the segments with length x and 3 are not perpendicular to their respective rays.

16. No; you do not know that the altitude bisects the angle.

17. Yes; $x = 7$ using the Angle Bisector Theorem.

18. B **19.** 9 **20.** 8

21. GD is not the perpendicular distance from G to $\overline{CE}$. The same is true about GF; the distance from G to each side of the triangle is the same.

22. T is not the incenter of $\triangle UWY$. *Sample answer:* $\overline{UZ} \cong \overline{ZY}$, $\overline{WX} \cong \overline{XY}$, and $\overline{UV} \cong \overline{VW}$

23. C **24.** 6 **25.** 0.5

26. They all have the same length; Concurrency of Angle Bisectors of a Triangle Theorem.

Sample:

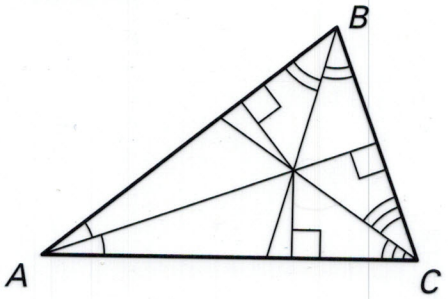

27. *Sample answer:* Since $\triangle ABC$ is a right triangle, its area is $\frac{1}{2}(AB \cdot AC)$. The area of $\triangle ABC$ is also the sum of the areas of $\triangle ABD$, $\triangle ADC$, and $\triangle DBC$.

This sum is

$\frac{1}{2}x(AB) + \frac{1}{2}x(AC) + \frac{1}{2}x(BC)$, or

$\frac{1}{2}x(AC + AB + BC)$. Setting

$\frac{1}{2}(AB \cdot AC)$ equal to

$\frac{1}{2}x(AC + AB + BC)$ and solving

for x gives $x = \dfrac{AB \cdot AC}{AC + AB + BC}$.

5.3 Problem Solving

28. No; G is on the angle bisector of $\angle LBR$.

29. At the incenter of the pond;

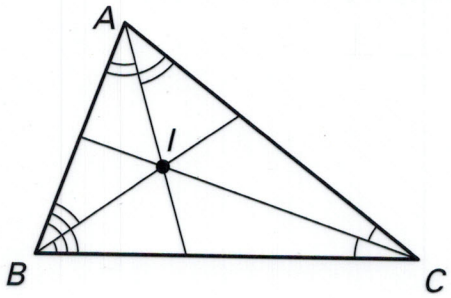

30. AAS; HL;

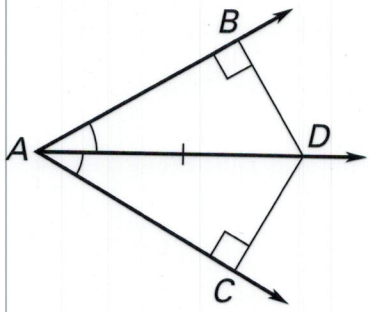

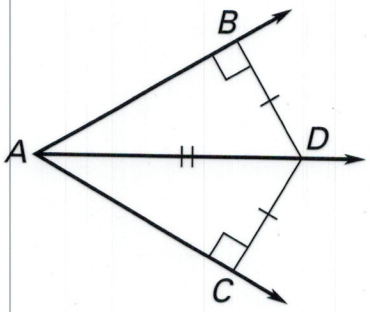

31. a. Equilateral; 3; the angle bisector would also be the perpendicular bisector.

b. Scalene; 6; each angle bisector would be different than the corresponding perpendicular bisector.

32. Angle bisector; more; no; the diameter of the inscribed circle is greater than 5 inches.

33. Perpendicular bisectors; (10, 10); 100 yd; about 628 yd;

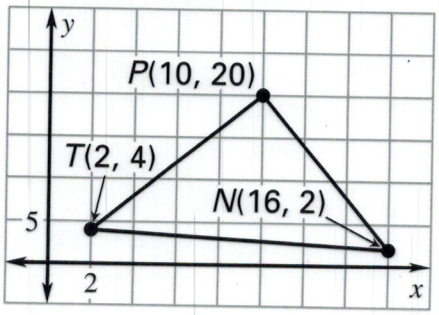

34. Statements (Reasons)

1. $\angle BAC$ is bisected by $\overline{AD}$, $\overline{DB} \perp \overline{AB}$, $\overline{DC} \perp \overline{AC}$. (Given)
2. $\angle BAD \cong \angle CAD$ (Definition of angle bisector)
3. $\angle DBA$ and $\angle DCA$ are right angles. (Definition of perpendicular lines)
4. $\angle DBA \cong \angle DCA$ (Right Angles Congruence Theorem)
5. $\overline{DA} \cong \overline{DA}$ (Reflexive Property of Segment Congruence)
6. $\triangle ABD \cong \triangle ACD$ (AAS)
7. $\overline{DB} \cong \overline{DC}$ (Corr. parts of $\cong$ $\triangle$s are $\cong$.)

35. Statements (Reasons)

1. $\angle BAC$ with D in its interior, $\overline{DB} \perp \overline{AB}$, $\overline{DC} \perp \overline{AC}$, $DB =$ ~~AC~~. DC (Given)
2. $\angle ABD$ and $\angle ACD$ are right angles. (Definition of perpendicular lines)
3. $\triangle ABD$ and $\triangle ACD$ are right triangles. (Definition of right triangle)
4. $\overline{BD} \cong \overline{CD}$ (Definition of segment congruence)
5. $\overline{AD} \cong \overline{AD}$ (Reflextive Property of Segment Congruence)
6. $\triangle ABD \cong \triangle ACD$ (HL)
7. $\angle BAD \cong \angle CAD$ (Corr. parts of $\cong$ $\triangle$s are $\cong$.)
8. $\overrightarrow{AD}$ bisects $\angle ABC$. (Definiton of angle bisector)

36. Statements (Reasons)

1. $\triangle ABC$, $\overline{AD}$ bisects $\angle CAB$, $\overline{BD}$ bisects $\angle CBA$, $\overline{DE} \perp \overline{AB}$, $\overline{DF} \perp \overline{BC}$, $\overline{DG} \perp \overline{CA}$. (Given)
2. $\angle DGC$, $\angle DFC$, $\angle DFB$, and $\angle DEB$ are right angles. (Definition of perpendicular lines)
3. $\triangle CGD$, $\triangle CFD$, $\triangle BED$, and $\triangle BFD$ are right triangles. (Definition of right triangle)
4. $\overline{BD} \cong \overline{BD}$, $\overline{CD} \cong \overline{CD}$ (Reflexive Property of Segment Congruence)
5. $\angle EBD \cong \angle FBD$ (Definition of angle bisector)
6. The angle bisector of $\angle ACB$ passes through point D, the incenter of $\triangle ABC$. (Definition of incenter)
7. $\angle GCD \cong \angle FCD$ (Definition of angle bisector)
8. $\triangle CGD \cong \triangle CFD$, $\triangle DEB \cong \triangle DFB$ (AAS)

36. (cont.)

9. $\overline{DG} \cong \overline{DF}$, $\overline{DE} \cong \overline{DF}$
(Corr. parts of $\cong$ △s are $\cong$.)

10. $\overline{DG} \cong \overline{DE} \cong \overline{DF}$
(Transitive Property of Segment Congruence)

37. a. Use the Concurrency of Angle Bisectors of Triangle Theorem; if you move the circle to any other spot it will extend into the walkway.

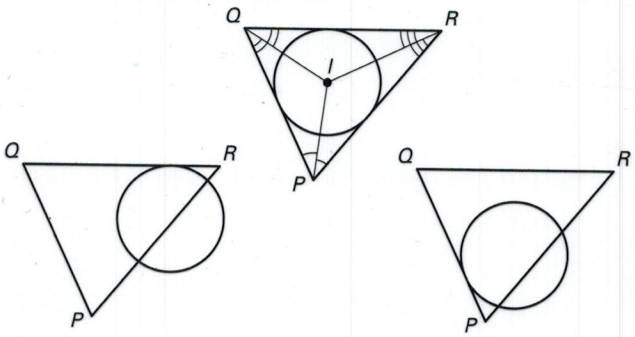

b. Yes; the incenter will allow the largest tent possible.

38. *Sample answer:* Construct three circles exterior to the triangle, each one tangent to one side of the triangle and the other two lines. The centers of the circles are the three points.

5.3 Mixed Review

39. 8, $(-6, 2)$ **40.** $\sqrt{29}$, $(2.5, 7)$

41. $2\sqrt{17}$, $(3, -4)$

42. $\triangle QNP \cong \triangle LNM$ by AAS. Use corr. parts of $\cong$ △s are $\cong$.

43. $\triangle JFG \cong \triangle JHG$ by SSS. Use corr. parts of $\cong$ △s are $\cong$ and the definition of angle bisector.

44. $\triangle VWX \cong \triangle VYX$ by ASA. $\overline{WX} \cong \overline{YX}$ by corr. parts of $\cong$ △s are $\cong$. $\overline{ZX} \cong \overline{ZX}$ by the Reflexive Property of Segment Congruence. $\triangle ZWX \cong \triangle ZYX$ by SAS.

45. $R(0, b)$, $T(a, 0)$; b, $\left(\frac{a}{2}, \frac{b}{2}\right)$

46. $2p$, $(m + p, n)$

47. $R(h, h)$, $T(h, 0)$; $h\sqrt{2}$, $\left(h, \frac{h}{2}\right)$

5.1–5.3 Mixed Review of Problem Solving

1. *Sample answer:* The park would be located outside of the county.

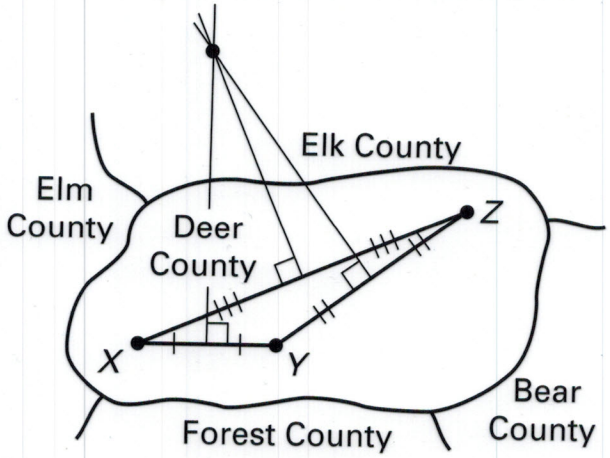

Quiz: 1) 12; Midsegment Thm
2) 7; ⊥ Bisector Thm
3) 12; Concurrency of ⊥ Bisectors Thm
4) 2b, 2a; $-\frac{b}{a}$, (a,b)

2. a. incenter; angle bisectors

b. HL

c. 3.9 cm; $(AE)^2 + (EG)^2 = (GA)^2$ or $7^2 + (EG)^2 = 8^2$

3. $\overleftrightarrow{AC}$; $y = -x + 9$; the y-intercepts are -6, 4, and 9. The slope of the line with 9 as the y-intercept is -1 so the equation of that line is $y = -1x + 9$.

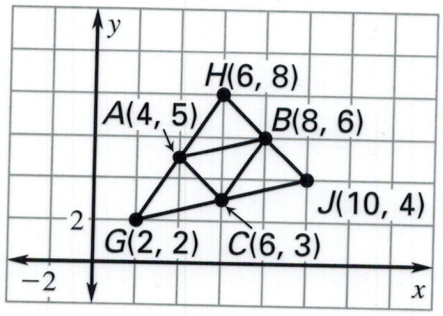

4. 9 ft;

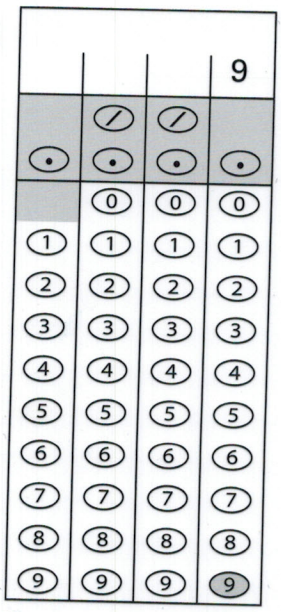

5. a. 262 ft

b. 840 ft^2

6. Equilateral triangle

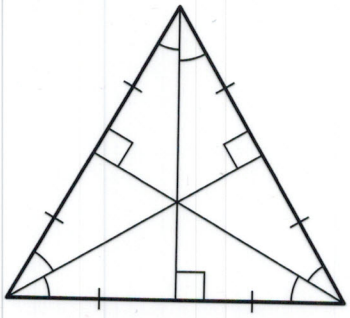

7. $\angle QPR$; $\overline{ST} \parallel \overline{PR}$ with $\overline{QP}$ a transversal. $\angle QPR$ and $\angle QST$ are corresponding angles.